G1402-3

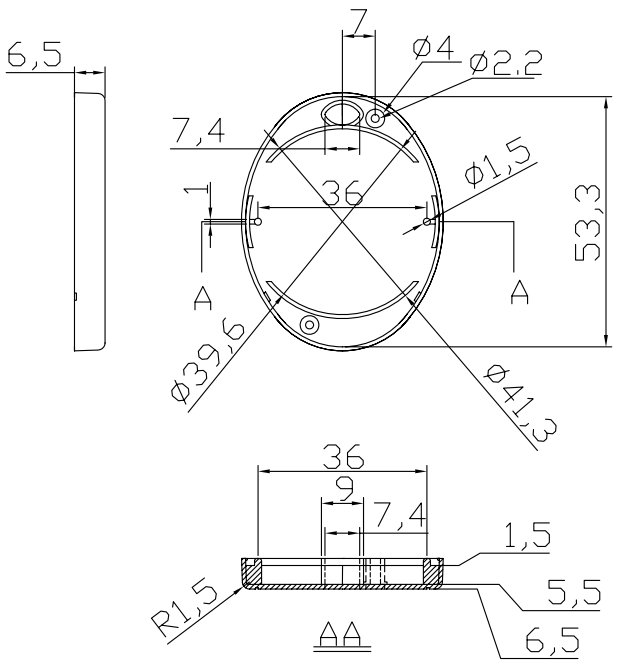

Bottom

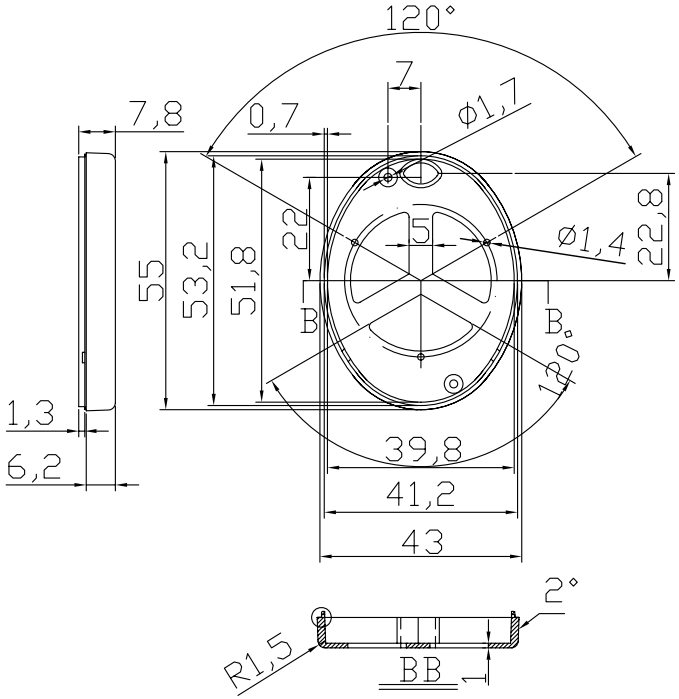

Cover

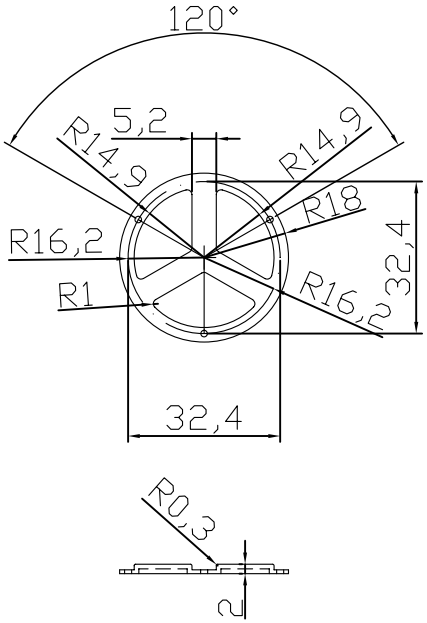

Rubber Button

Note: Two colour are available in black and light grey.

宣又實業有限公司 GAINTA INDUSTRIES LTD.	設計 DES'D BY	繪圖 DRA'D BY	核圖 CHK'D BY	比例 SCALE	日期 DATE	材質 MATE.	圖名 TITLE:	圖號 DWG NO.:	圖號 REVISID	說明 DESCRIPTION
		Spencer			Sep.6,2005	Plastic	G1402-3			