Piezo Buzzer Series

KLS3-PB-14*08 With Circuit Piezo Buzzer Series

Order Code	KLS3-PB-14*08-A	KLS3-PB-14*08-B
Rated Voltage	$5V_{DC}$	$12V_{DC}$
Operating Voltage	$3...9V_{DC}$	$1.5...16V_{DC}$
Max.Rated Current	8mA	8mA
Resonant Frequency	4.0±0.5KHz	4.0±0.5KHz
Min.S.P.L.(@10cm)	80dB	85dB
Tone Nature	Continuous	
Operating Temp	-20~+80°C	
Weight	1g	

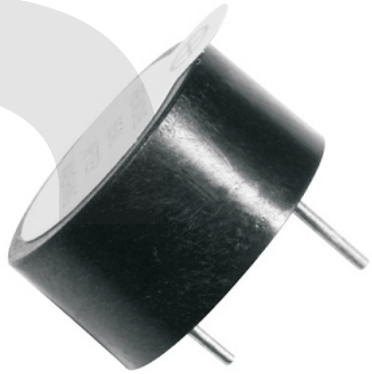

Dimensions (Unit:mm)

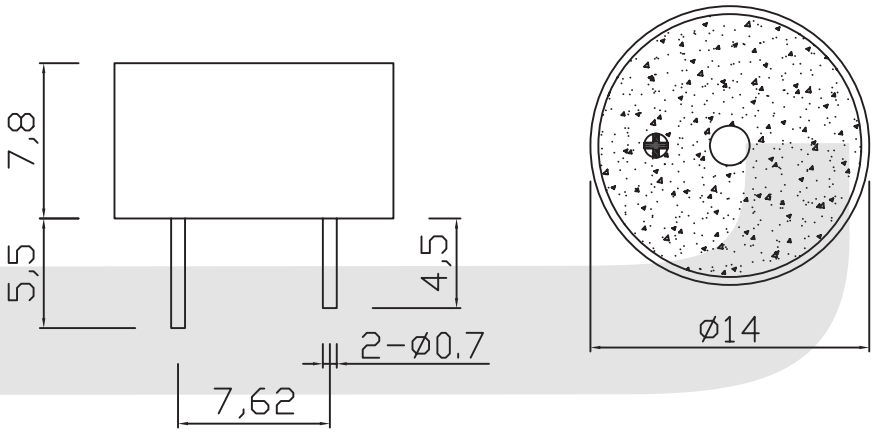

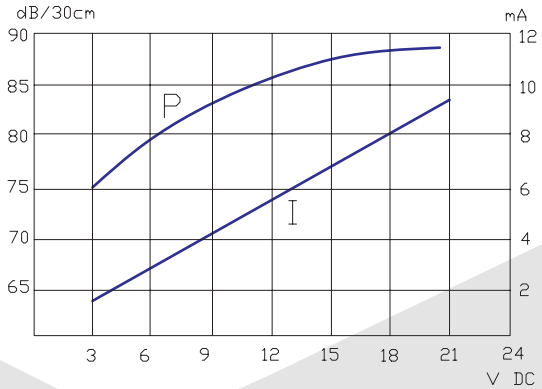

ORDER INFORMATION

Product NO.: KLS3- PB - 14*08-A

Part Number — KLS3

Piezo Buzzer Series — PB

Order Code — 14*08-A