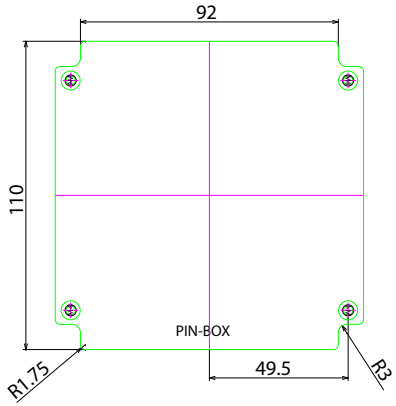


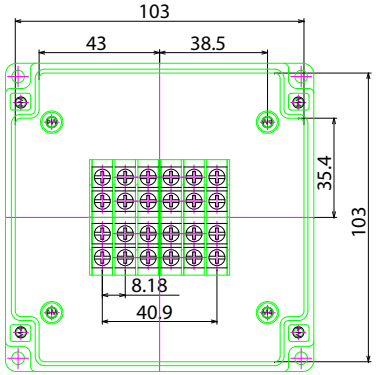


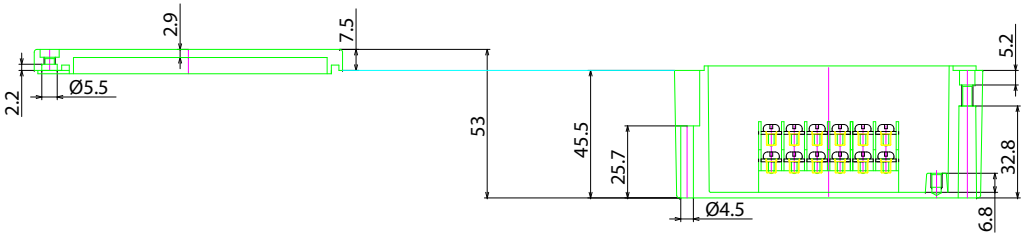


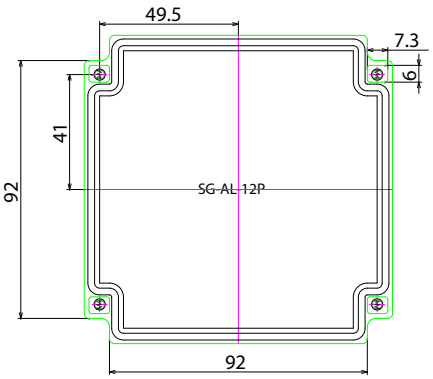


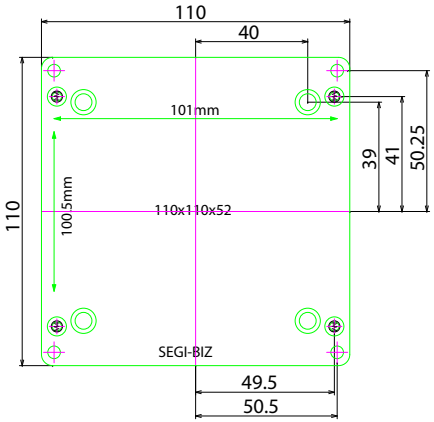


| P/NO. | P/NAME | MATERIAL | EA | SIZE | REMARK | SPARE |
|---|---|---|---|---|---|---|
| | | | | | | |

| Scale | Units | mm | Tor | TITLE | PIN-BOX |
|---|---|---|---|---|---|
| DRAW | DESIGN | CHECK | APPROVE | | 110X110X53 |

no.
Stock no.
NO.